MERCURY (40 Carb (3 CYL)(4-STROKE))
Serial Nbr Range: 1C000001 _Up ()

Gear Housing(Driveshaft-Long-2:1 Gear Ratio)

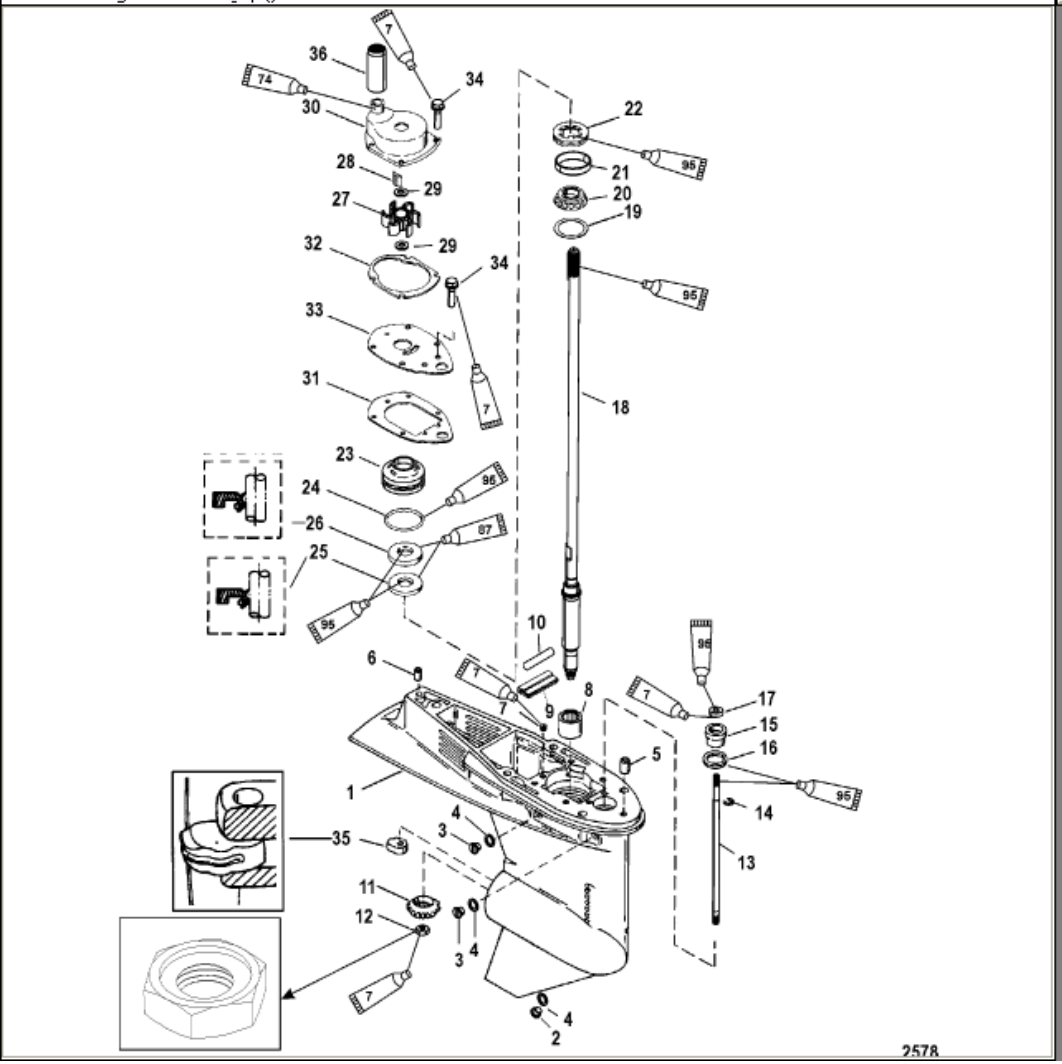

Parts List

Ref	Class	Part	Description	Qty	Comment	Footnote
-	1671	9760T44	GEAR HOUSING ASSEMBLY, Con	1		
1	1671	9760T42	GEAR HOUSING, (Basic)	1		
2	10	79953Q 2	SCREW KIT, (.375-16 x .250) D	1		
3	10	79953Q 2	SCREW KIT, (.375-16 x .250) D	2		
4	12	19183 3	SEAL	3		15,18
5	17	43043	PIN, Dowel (.375 x .625) (With I	1		
6	17	43044	PIN, Dowel - Without Hole (.375	1		
7	22	878089	PLUG, Pipe (.0625-27)	1		
8	31	812768	ROLLER BEARING	1		
9		818226A 1	SEAL/PLATE KIT	1		
10		NSS	NOT SOLD SEPARATE, Fille	1		
11	43	893604T	GEAR, Pinion	1		
12	11	55910	NUT, (.437-20)	1		
13		859607A 1	SHIFT SHAFT ASSEMBLY	1		
14	53	29641	E RING	1		
15	23	813696A 2	BUSHING ASSEMBLY	1		
16	25	45258	O-RING, (.987 x .103)	1		15
17	26	816464 1	SEAL, Oil	1		15
18	45	859102	DRIVESHAFT	1		
19	15	812770A 1	SHIM SET	AR		
20	31	77420A 1	ROLLER BEARING ASSEMBLY	1		
21		NSS	NOT SOLD SEPARATE, Cup	1		
22	11	812820 1	NUT	1		
23	46	812966A 7	WATER PUMP BASE	1		18
24	25	30224	O-RING, (1.859 x .139)	1		15,18
25	26	814669	OIL SEAL	1		15,18
26	26	814670	OIL SEAL	1		15,18
27	47	19453T	IMPELLER	1		18
28	28	19699	KEY	1		18
29	12	858234	WASHER	2		18
30		14334A 3	WATER PUMP	1		18
31	27	19701	GASKET (Lower)	1		15,18
32	27	822189	GASKET, (Upper Water Pump)	1		15,18
33		19700A 2	FACE PLATE	1		18
34	10	824832 4	SCREW, (M6 x 16)	6		
35		76039 4	CAM, Shift Control	1		
36		859770 1	COUPLER	1		18
-	26	814669A 2	GEAR HOUSING SEAL KIT	1		
-	46	812966A12	REPAIR KIT, Water Pump	1		